STYLE No. :L509BNY-33/410Q

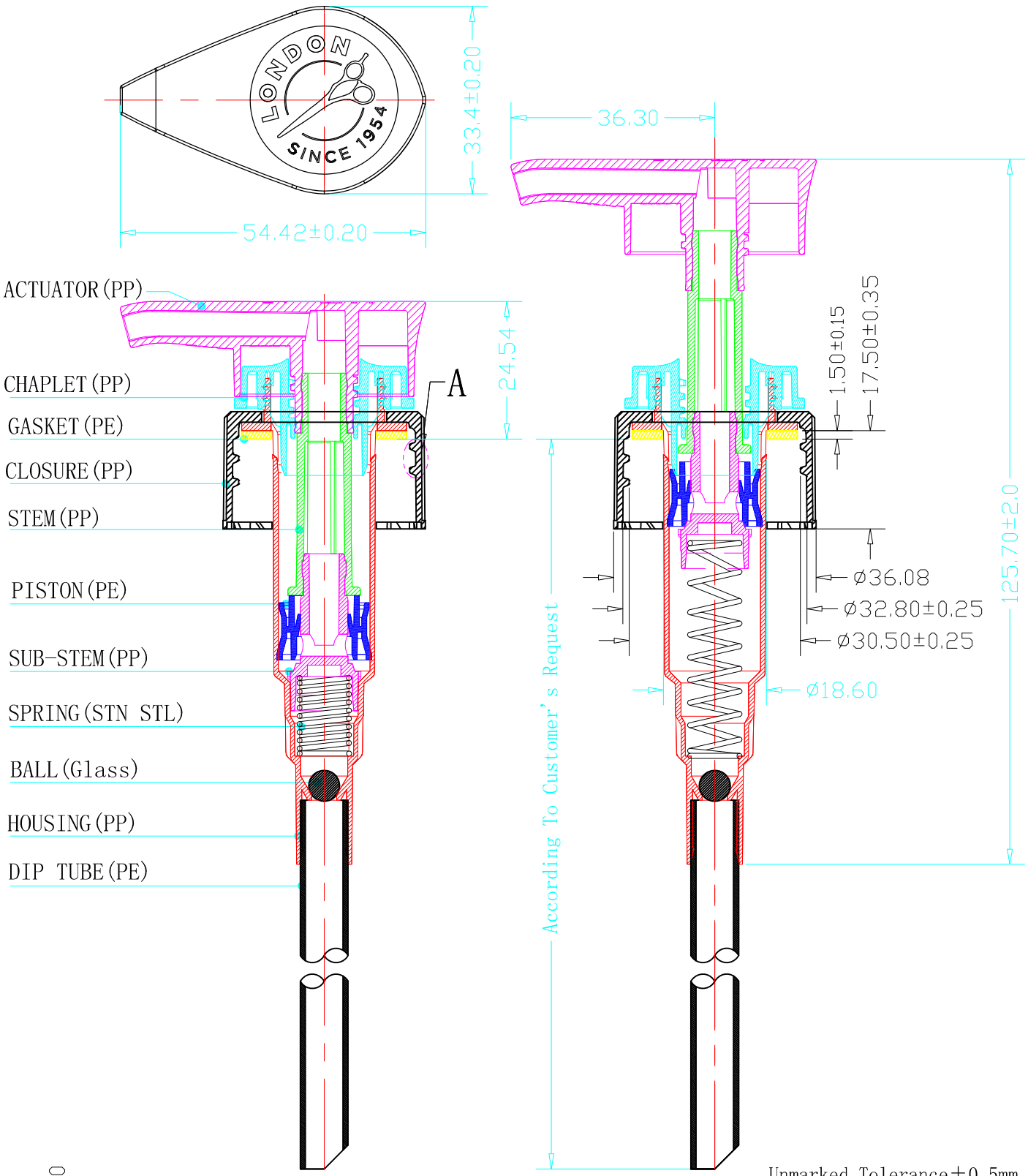

Unmarked Tolerance±0.5mm

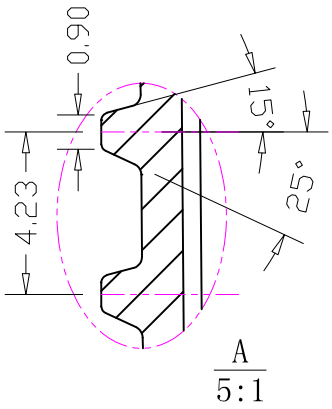

Marker	Before modification	After modification	Date

Item	L509BNY-33/410Q	Material	
Dwg No.	L509BNY-33/410Q-A01	Version	A0
ERP No.		Quantity	
Drawing	Z/L509	Plastic	
Design	ZENGQIKUN20191122	Cav	
Audit		Unit	mm
Approval		Rate	1:1
		Visual angle	

All Rights Reserved

Assembly Drawing

CLC 联昌

Total 1st page(s) The 1st page